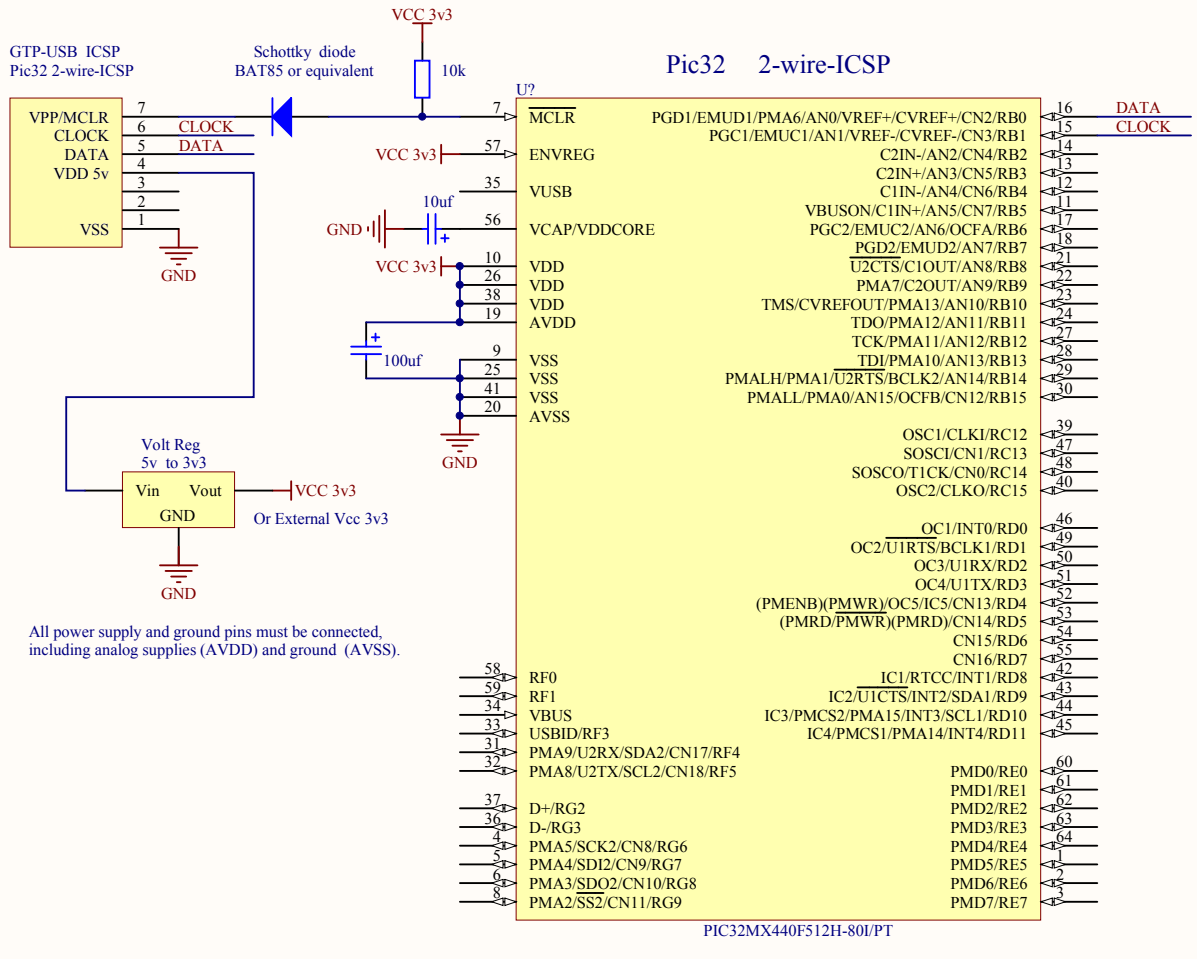
GTP-USB ICSP
Pic32 2-wire-ICSP
VPP/MCLR
CLOCK
DATA
VDD 5v
VSS
CLOCK
DATA
GND
Schottky diode
BAT85 or equivalent
VCC 3v3
10k
Pic32 2-wire-ICSP
U?
MCLR
ENVREG
VUSB
VCAP/VDDCORE
VDD
VDD
VDD
AVDD
VSS
VSS
VSS
AVSS
10uf
100uf
GND
Volt Reg
5v to 3v3
Vin
Vout
GND
VCC 3v3
Or External Vcc 3v3
All power supply and ground pins must be connected,
including analog supplies (AVDD) and ground (AVSS).
RF0
RF1
VBUS
USBID/RF3
PMA9/U2RX/SDA2/CN17/RF4
PMA8/U2TX/SCL2/CN18/RF5
D+/RG2
D-/RG3
PMA5/SCK2/CN8/RG6
PMA4/SDI2/CN9/RG7
PMA3/SDO2/CN10/RG8
PMA2/SS2/CN11/RG9
PGD1/EMUD1/PMA6/AN0/VREF+/CVREF+/CN2/RB0
PGC1/EMUC1/AN1/VREF-/CVREF-/CN3/RB1
C2IN-/AN2/CN4/RB2
C2IN+/AN3/CN5/RB3
C1IN-/AN4/CN6/RB4
VBUSON/C1IN+/AN5/CN7/RB5
PGC2/EMUC2/AN6/OCFA/RB6
PGD2/EMUD2/AN7/RB7
U2CTS/C1OUT/AN8/RB8
PMA7/C2OUT/AN9/RB9
TMS/CVREFOUT/PMA13/AN10/RB10
TDO/PMA12/AN11/RB11
TCK/PMA11/AN12/RB12
TDI/PMA10/AN13/RB13
PMALH/PMA1/U2RTS/BCLK2/AN14/RB14
PMALL/PMA0/AN15/OCFB/CN12/RB15
OSC1/CLKI/RC12
SOSCI/CN1/RC13
SOSCO/T1CK/CN0/RC14
OSC2/CLKO/RC15
OC1/INT0/RD0
OC2/U1RTS/BCLK1/RD1
OC3/U1RX/RD2
OC4/U1TX/RD3
(PMENB)(PMWR)/OC5/IC5/CN13/RD4
(PMRD/PMWR)(PMRD)/CN14/RD5
CN15/RD6
CN16/RD7
IC1/RTCC/INT1/RD8
IC2/U1CTS/INT2/SDA1/RD9
IC3/PMCS2/PMA15/INT3/SCL1/RD10
IC4/PMCS1/PMA14/INT4/RD11
PMD0/RE0
PMD1/RE1
PMD2/RE2
PMD3/RE3
PMD4/RE4
PMD5/RE5
PMD6/RE6
PMD7/RE7
DATA
CLOCK
PIC32MX440F512H-80I/PT

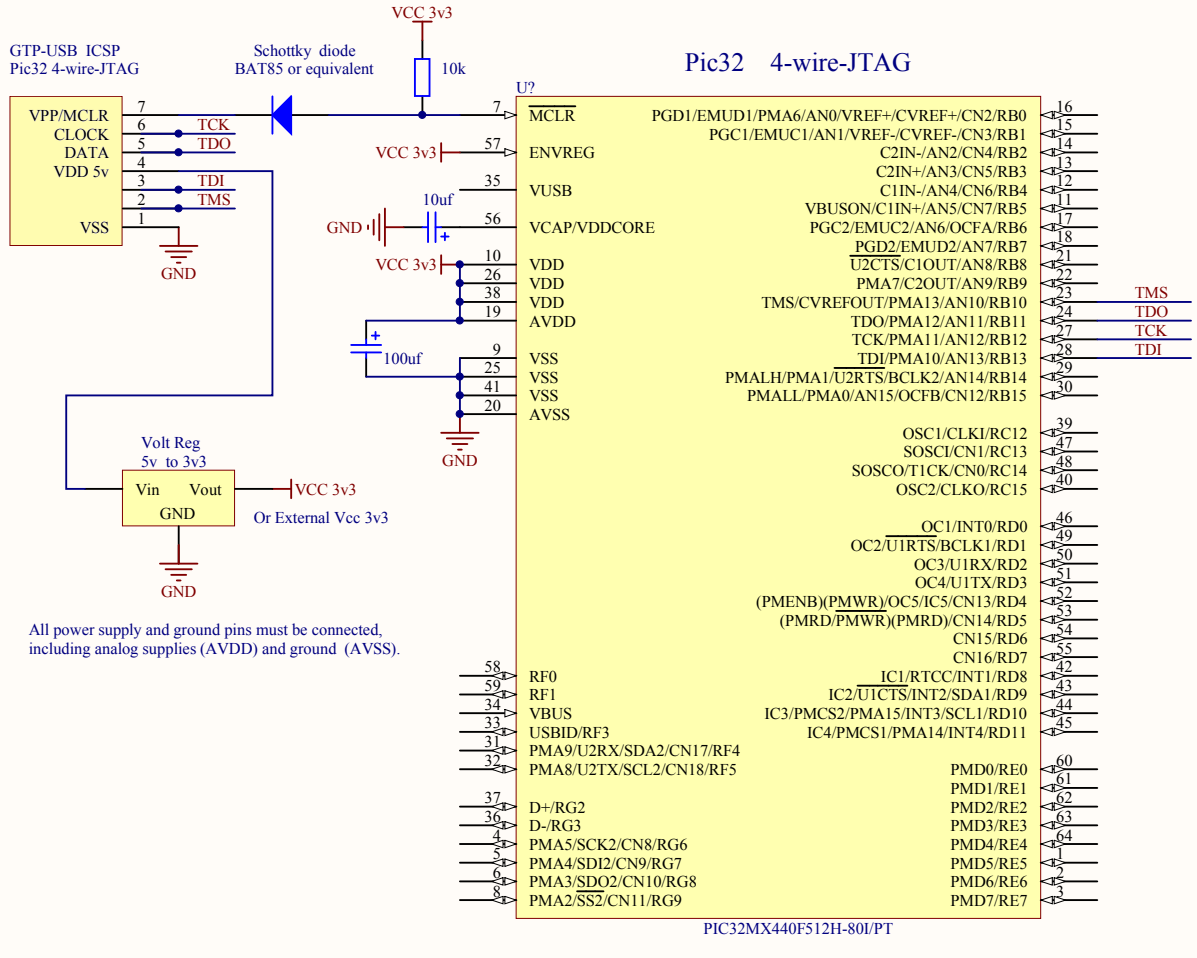
Pic32 4-wire-JTAG
GTP-USB ICSP
Pic32 4-wire-JTAG
VPP/MCLR
CLOCK
DATA
VDD 5v
VSS
TCK
TDO
TDI
TMS
GND
Schottky diode
BAT85 or equivalent
VCC 3v3
10k
U?
MCLR
ENVREG
VUSB
VCAP/VDDCORE
VDD
AVDD
VSS
AVSS
10uf
100uf
Volt Reg
5v to 3v3
Vin
Vout
Or External Vcc 3v3
All power supply and ground pins must be connected,
including analog supplies (AVDD) and ground (AVSS).
PGD1/EMUD1/PMA6/AN0/VREF+/CVREF+/CN2/RB0
PGC1/EMUC1/AN1/VREF-/CVREF-/CN3/RB1
C2IN-/AN2/CN4/RB2
C2IN+/AN3/CN5/RB3
C1IN-/AN4/CN6/RB4
VBUSON/C1IN+/AN5/CN7/RB5
PGC2/EMUC2/AN6/OCFA/RB6
PGD2/EMUD2/AN7/RB7
U2CTS/C1OUT/AN8/RB8
PMA7/C2OUT/AN9/RB9
TMS/CVREFOUT/PMA13/AN10/RB10
TDO/PMA12/AN11/RB11
TCK/PMA11/AN12/RB12
TDI/PMA10/AN13/RB13
PMALH/PMA1/U2RTS/BCLK2/AN14/RB14
PMALL/PMA0/AN15/OCFB/CN12/RB15
OSC1/CLKI/RC12
SOSCI/CN1/RC13
SOSCO/T1CK/CN0/RC14
OSC2/CLKO/RC15
OC1/INT0/RD0
OC2/U1RTS/BCLK1/RD1
OC3/U1RX/RD2
OC4/U1TX/RD3
(PMENB)(PMWR)/OC5/IC5/CN13/RD4
(PMRD/PMWR)(PMRD)/CN14/RD5
CN15/RD6
CN16/RD7
IC1/RTCC/INT1/RD8
IC2/U1CTS/INT2/SDA1/RD9
IC3/PMCS2/PMA15/INT3/SCL1/RD10
IC4/PMCS1/PMA14/INT4/RD11
RF0
RF1
VBUS
USBID/RF3
PMA9/U2RX/SDA2/CN17/RF4
PMA8/U2TX/SCL2/CN18/RF5
D+/RG2
D-/RG3
PMA5/SCK2/CN8/RG6
PMA4/SDI2/CN9/RG7
PMA3/SDO2/CN10/RG8
PMA2/SS2/CN11/RG9
PMD0/RE0
PMD1/RE1
PMD2/RE2
PMD3/RE3
PMD4/RE4
PMD5/RE5
PMD6/RE6
PMD7/RE7
PIC32MX440F512H-80I/PT